IoT-Based Battery Safety Monitoring System for Electric Motorcycle

CDE4301 Final Report

Student: JIANG SONGTING

Student ID: A0255593U

Word Count: 4580

Table of Contents

Abstract....4

1. Introduction....4

    1.1 Background and Motivation....4

    1.2 Project Objectives....5

    1.3 Scope and Boundaries....5

    1.4 Novelty and Value Proposition....5

2. Literature Review....6

    2.1 Battery Safety Risks in Electric Vehicles....6

    2.2 Existing Commercial Solutions....7

    2.3 IoT-Based Battery Monitoring Research....7

    2.4 Gaps in Existing Work....8

3. Methodology....8

    3.1 Evaluation Framework....8

    3.2 Hardware Component Selection Overview....8

        3.2.1 Microcontroller Selection....9

        3.2.2 4G and GPS Module Selection....10

        3.2.3 Temperature Sensor Selection....12

        3.2.4 Inertial Measurement Unit Selection....13

        3.2.5 Voltage Measurement Approach....15

    3.3 Prototype Implementation....16

4. Implementation....17

    4.1 Hardware Connections....17

    4.2 Firmware....18

    4.3 Challenges and Solutions....18

5. Testing and Results....19

5.1 Test Overview 19
5.2 Temperature Monitoring Test 19
5.3 Voltage Monitoring Test 20
5.4 Motion Data and Impact Detection Test 20
5.5 OLED Display and Cloud Data Logging Test 22
5.6 Alert Processing Speed Test 23
6. Discussion 23
6.1 Achievement of Objectives 23
6.2 System Performance 24
6.3 Limitations 24
7. Conclusion and Future Work 25
7.1 Conclusion 25
7.2 Impact and Potential 25
7.3 Future Work 26
References 28
Appendix A: System Schematic 29

Abstract

This report presents the design and implementation of a prototype IoT-based battery safety monitoring system for a high-performance electric motorcycle developed by an industry partner. The company's existing hardware lacked battery safety monitoring. This project extends it by adding temperature monitoring using the DS18B20, voltage monitoring using an ADC resistor divider circuit, and motion data logging using the MPU6050 IMU. All sensor data is uploaded every second via the AIR780EX 4G module to the OneNET cloud platform and viewable on a mobile app. When any value exceeds a configured threshold, the platform sends an email alert. A local OLED display provides real-time on-device feedback. Four out of five objectives were fully achieved, with the remaining objective partially validated due to scope limitations. The main contribution is system integration. No existing commercial product currently combines battery monitoring, motion data logging, GPS reporting, and 4G connectivity in one device designed for electric motorcycles.

1. Introduction

1.1 Background and Motivation

Electric motorcycles are becoming more popular as a cleaner alternative to petrol vehicles. They use lithium-ion battery packs as their main power source. Lithium-ion batteries can experience thermal runaway, a condition where heat builds up faster than it can escape, which can cause fire or explosion if triggered by physical damage, overcharging, or extreme temperatures (Hsieh et al., 2021). In Singapore, burn injuries from personal mobility device (PMD) fires increased 20 times between 2016 and 2020, and battery failure was found to be the cause in every case (Hsieh et al., 2021).

This project is done in collaboration with an industry partner developing a high-performance electric motorcycle for both road and track use. The vehicle uses a 400V lithium-ion battery pack. The company already has a prototype board with basic 4G communication and motion sensing, but it does not have any battery safety monitoring. There is no way to detect temperature or voltage anomalies, and no system to alert the rider remotely if something goes wrong. The risk is especially serious for motorcycles because there is no protective

body around the rider, so a battery fire directly causes harm. The battery pack also faces more vibration and temperature variation compared to a car.

1.2 Project Objectives

This project aims to design and build a prototype IoT-based battery safety monitoring system with the following five objectives. The first objective is to measure battery temperature continuously and upload data to the cloud so that abnormal heat is detected before thermal runaway happens. The second is to measure battery voltage via an ADC resistor divider and upload to the cloud so that abnormal voltage levels can be identified. The third is to upload accelerometer, gyroscope, and GPS data to the cloud continuously so that impact events can be detected through threshold rules on the cloud platform. The fourth is to show current sensor readings on a local OLED screen so the rider can check status without needing a phone. The fifth is to send all sensor data to the OneNET cloud platform via 4G and display it in real time on the mobile app, with automatic email alerts when any value exceeds a threshold.

1.3 Scope and Boundaries

The prototype runs on USB power. For voltage monitoring, a resistor divider connected to the USB supply rail is used as a stable ADC input instead of a real battery. This validates circuit and firmware logic but does not test dynamic battery voltage behaviour. Working with the 400V battery pack is outside the safe scope of this project. Alert notifications use the OneNET personal tier, which supports email alerts. SMS alerts are available on the enterprise tier as a future upgrade. Items outside scope include dynamic battery testing, cell balancing, state-of-charge and state-of-health estimation, current monitoring, hardware cutoff protection, and high-voltage adaptation.

1.4 Novelty and Value Proposition

The market currently has three separate solution types for electric motorcycle safety. The first type is GPS trackers with basic voltage monitoring, such as Monimoto and SinoTrack. The second type is crash detection and SOS systems,

such as GeoRide and CHIGEE AIO-6. The third type is traditional BMS solutions integrated inside battery packs. Each solves part of the problem but none provides a complete solution. GPS trackers do not monitor battery temperature. Crash detection systems do not check battery health. BMS solutions do not connect to the internet or report GPS location. The most advanced commercial products, such as the Teltonika FMC003, require OBD-II ports that most motorcycles do not have (Teltonika, 2024).

The contribution of this project is system integration. It brings existing sensing, communication, and cloud technologies into one unified safety monitoring system that no current product provides, designed specifically for electric motorcycles. The industry partner is a small startup company, so cost-effectiveness of components is a key consideration alongside performance. This project uses low-cost components including the STM32F103C8T6, AIR780EX, and OneNET platform, keeping the total bill of materials affordable and making further development practical for the partner. The system uses 4G instead of WiFi so it works on roads and racetracks where no WiFi access is available, and is designed for motorcycles where OBD-II solutions cannot be used.

2. Literature Review

2.1 Battery Safety Risks in Electric Vehicles

Lithium-ion batteries are prone to thermal runaway triggered by physical damage from impacts, overcharging, over-discharging, or extreme temperatures (Hsieh et al., 2021). In Singapore, PMD-related fire incidents increased from 9 in 2016 to 74 in 2018, with burn injury admissions rising 20 times between 2016 and 2020 (Hsieh et al., 2021). All recorded cases were caused by lithium-ion battery failure, with 90% occurring during unsupervised charging. The risk is especially serious for electric motorcycles because there is no protective body around the rider, which means a battery fire directly exposes the rider to harm. The battery pack also faces more vibration and high g-forces during track use than in a car.

2.2 Existing Commercial Solutions

The commercial market has three main categories. GPS trackers such as Monimoto and SinoTrack offer real-time location tracking, geofencing, and basic voltage monitoring, but include no temperature monitoring or thermal event detection. Crash detection systems such as GeoRide and CHIGEE AIO-6 detect impacts and send GPS location alerts to emergency contacts (GeoRide, n.d.; CHIGEE, n.d.), but they do not monitor battery health at all. Traditional BMS solutions are integrated inside battery packs and focus on local cell balancing and protection (Revolt Motors, n.d.), without remote monitoring, GPS alerting, or crash detection. More advanced products like the Teltonika FMC003 offer 4G-connected battery monitoring including temperature. But require OBD-II ports that motorcycles do not have (Teltonika, 2024). No existing product combines all four safety dimensions in a motorcycle-specific form factor.

2.3 IoT-Based Battery Monitoring Research

Research has demonstrated IoT-connected battery monitoring using low-cost microcontrollers, though none targets the electric motorcycle context. An STM32-based battery parameter detection system (Lu, 2021) validates STM32 as a capable platform for battery monitoring but does not include wireless communication or cloud connectivity, limiting its usefulness to physically accessible devices only. An IoT-based system using a GSM module for voltage and GPS data (Abd Wahab, 2018) demonstrates value in combining battery monitoring with location tracking, but GSM has limited bandwidth and is being phased out in many regions, making it unsuitable as a long-term platform. More recent work integrates IoT-enabled BMS with cloud platforms (Krishna et al., 2024) but uses WiFi. This is not a minor engineering limitation but a fundamental architectural mismatch with mobile vehicle use, because a motorcycle moving at road speed exits a typical WiFi coverage area within seconds of departure, rendering the monitoring system non-functional for almost all of its operating life. No existing research prototype combines battery monitoring, crash detection, GPS alerting, and 4G connectivity in a single system for electric motorcycles.

2.4 Gaps in Existing Work

Four gaps were identified from the review above. First, no existing BMS or IoT monitoring system integrates crash detection alongside battery monitoring. Second, WiFi-based systems are architecturally incompatible with mobile road use, and no research prototype uses 4G for battery monitoring. Third, commercial IoT monitoring products require OBD-II ports, which are unavailable on motorcycles. Fourth, and most importantly, no integrated system currently exists that combines all four safety dimensions, namely battery monitoring, crash detection, GPS alerting, and 4G cloud connectivity, for electric motorcycles. This project addresses the fourth gap directly through system integration.

3. Methodology

3.1 Evaluation Framework

This project uses a systematic framework to select all hardware components. The main criteria include cost, system complexity, performance, power consumption, and compatibility with the existing prototype.

This framework is important because the system has limited resources such as UART and ADC channels. Therefore, each component must not only meet its own function, but also fit well into the whole system without causing conflicts or requiring major redesign.

For example, components that reduce the number of required interfaces or avoid firmware changes are preferred. This helps to simplify integration and reduce development time.

Overall, this framework ensures that all design decisions are based on a balanced trade-off between performance, cost, and system constraints, rather than choosing components based only on individual specifications.

3.2 Hardware Component Selection Overview

A structured comparison approach was used to evaluate all candidate hardware components across different subsystems.

The evaluation is based on consistent criteria, including cost, performance, system integration complexity, and compatibility with the existing prototype. This ensures that all options are assessed fairly using the same standards.

For example, components are compared not only by their individual specifications, but also by how they affect system-level constraints such as UART and ADC usage, as well as their impact on firmware and hardware redesign.

The detailed comparisons for each subsystem are presented in the following sections, where the selected components are justified based on these criteria.

3.2.1 Microcontroller Selection

The microcontroller selection focuses on balancing performance, compatibility, and system requirements. Three options were evaluated: STM32F103C8T6, ESP32-WROOM-32, and ATmega328P (Table 1).

The ESP32 provides high performance and built-in wireless features. However, these features are not needed because communication is handled by a separate 4G module. In addition, it has higher power consumption and requires a full firmware rewrite.

The ATmega328P is lower in cost but has limited capability. It uses an 8-bit architecture, has lower ADC resolution, and only one UART interface, which is not enough for this system.

The STM32F103C8T6 was selected because it provides sufficient performance and multiple interfaces while remaining compatible with the existing prototype. This avoids redesign and supports all required functions.

Microcontroller	**STM32F103C8T6 (STMicroelectronics)**	**ESP32-WROOM-32 (Espressif Systems)**	**ATmega328P-PU (Microchip / Arduino)**
Unit price (1 qty)	$3.04 (Newark / element14)	$4.00 (DigiKey, varies by variant)	$2.28 (DigiKey, bare MCU chip)
Architecture	32-bit ARM Cortex-M3 @ 72 MHz	32-bit Xtensa LX6 dual-core @ 240 MHz	8-bit AVR @ 16 MHz
UART interfaces	3 hardware UARTs	3 hardware UARTs	1 hardware UART

I2C buses	2 dedicated I2C buses	2 I2C buses	1 I2C bus
ADC resolution	12-bit ADC (4096 levels)	12-bit ADC	10-bit ADC (1024 levels only)
Built-in wireless	None	WiFi + Bluetooth built-in	None
Package / assembly	LQFP-48, standard PCB reflow	LCC module, larger footprint	DIP-28, through-hole
Firmware compatibility	Used in company existing prototype; firmware compatible	Requires full firmware rewrite	Requires full firmware rewrite
Why selected is better	Provides all required peripherals simultaneously at a competitive price. Compatible with company existing firmware. WiFi in ESP32 is not needed since 4G is used at system level. Higher ADC resolution than ATmega328P.	WiFi not needed at system level (4G used). More expensive. Larger footprint. Higher power draw. Switching requires full firmware rewrite.	8-bit architecture is underpowered. Only 10-bit ADC reduces voltage measurement accuracy. Single UART insufficient for this system. Switching requires full rewrite.

Table 1: Microcontroller Comparison

3.2.2 4G and GPS Module Selection

The communication module was selected based on reliability and system integration. Three options were considered: AIR780EX, SIM7600G with separate GPS, and the original dual-module setup (Table 2).

The SIM7600G offers higher data speed, but this is not necessary for sensor data transmission. It also requires two modules, which increases system complexity and uses more interfaces.

The original setup using GT-U7 GPS showed poor performance during field testing in Singapore CBD. The GPS signal was frequently lost due to tall buildings.

The AIR780EX was selected because it combines 4G and multi-constellation GNSS in one module. Field testing showed that it maintains a stable GPS fix in urban environments, while also reducing wiring and interface requirements.

4G and GPS Module	**AIR780EX (Air724)**	**SIM7600G-H (SIMCom) + separate GPS**	**WH-LTE-7S1 + GT-U7 (original company setup)**
Unit price (1 qty)	$15 (module, combined 4G + GNSS)	$22 (SIM7600G ~$18) + separate GPS module (~$4)	$18 (two separate modules combined)
4G standard	LTE Cat.1 — 5 Mbps up / 10 Mbps down	LTE Cat.4 — 50 Mbps up / 150 Mbps down	LTE Cat.1 (WH-LTE-7S1)
GNSS constellations	GPS + BeiDou (multi-constellation)	GPS + GLONASS + BeiDou (depends on add-on module)	GPS only — single-constellation (GT-U7)
Urban canyon GPS performance	Reliable fix confirmed in Singapore CBD (Robinson Road) testing	Would perform similarly due to multi-constellation support	Repeatedly lost GPS fix in Robinson Road CBD testing
UART interfaces needed	1 UART (combined 4G and GNSS)	2 UARTs (one per module)	2 UARTs (one per module)
Module count	1 module, 1 antenna set	2 modules, 2 antenna sets	2 modules, 2 antenna sets
Why selected is better	Replaces two separate modules (WH-LTE-7S1 + GT-U7) with one, saving a UART interface and reducing BOM complexity. Multi-constellation GNSS confirmed reliable in Singapore CBD urban canyon testing where the GT-U7 failed. Lower total cost than	Higher 4G speed than needed for sensor telemetry. Two modules require two UART connections, more wiring, and more PCB space. Higher total cost.	Single-constellation GPS (GT-U7) failed field testing in Singapore CBD. Requires two separate UART connections. No improvement over current limitation.

	SIM7600G plus separate GPS.		

Table 2: 4G and GPS Module Comparison

3.2.3 Temperature Sensor Selection

The temperature sensor was selected based on accuracy, simplicity, and system resource usage. Three options were considered: DS18B20, NTC thermistor, and LM35 (Table 3).

The NTC thermistor has the lowest cost but requires calibration and additional analog components. This increases system complexity and uses ADC resources.

The LM35 provides analog output but is sensitive to noise and also requires a dedicated ADC channel, which is already used in this system.

The DS18B20 was selected because it provides digital output and is factory calibrated. It requires only one GPIO pin and supports multiple sensors on the same line, making it simple and scalable.

Temperature Sensor	**DS18B20+ (Analog Devices / Maxim)**	**NTC Thermistor 10 kΩ (e.g. Vishay NTCLE100E3103JB0)**	**LM35DZ (Texas Instruments)**
Unit price (1 qty)	$4.23 (DigiKey, TO-92 package)	$0.48 (DigiKey, leaded)	$1.73 (DigiKey, TO-92 package)
Output type	Digital — 1-Wire serial protocol	Analog — resistance changes with temperature	Analog — voltage output (10 mV per degree Celsius)
Accuracy	Plus or minus 0.5 °C (factory calibrated, 0 to 70 °C)	Plus or minus 1 to 2 °C (requires individual calibration)	Plus or minus 0.5 °C (but needs clean analog signal path)
Temperature range	Negative 55 to plus 125 °C	Typically negative 40 to plus 125 °C	0 to plus 100 °C (limited low-end range)
External components needed	One 4.7 kΩ pull-up resistor only	Precision resistors, stable voltage reference, and dedicated ADC channel	Dedicated ADC channel and decoupling capacitors

GPIO pins used	1 GPIO pin (PA7)	1 ADC pin (already used by voltage sensing)	1 ADC pin (already used by voltage sensing)
Multiple sensors on one pin	Yes — 1-Wire daisy-chain supported on same pin	No — each sensor needs its own ADC channel	No — each sensor needs its own ADC channel
Why selected is better	Factory calibrated with no additional setup required. Digital output eliminates analog noise problems. Uses only one GPIO pin and one resistor. Supports future expansion with multiple sensors on the same pin. Temperature range covers all lithium-ion battery operating and fault conditions.	Lowest cost per unit but requires extra components, individual calibration, and firmware linearisation using the Steinhart-Hart equation. Not factory calibrated. Competing for ADC channels already used by voltage sensing.	Lower temperature range misses sub-zero battery conditions. Requires an analog signal path which is susceptible to noise from nearby digital circuits. Competing for ADC channels. More expensive than NTC with no benefit for this application.

Table 3: Temperature Sensor Comparison

3.2.4 Inertial Measurement Unit Selection

The IMU was selected based on compatibility and availability. Three options were evaluated: MPU-6050, LSM6DSOTR, and BMI160 (Table 4).

The LSM6DSOTR offers similar performance at a lower cost, but switching to it would require firmware changes and additional integration effort.

The BMI160 was excluded because it is no longer in production, which creates supply risk.

The MPU-6050 was selected because it is already used in the existing prototype. This ensures compatibility and reduces development time, while still meeting the system requirements.

IMU	**MPU-6050 (TDK InvenSense)**	**LSM6DSOTR (STMicroelectronics)**	**BMI160 (Bosch Sensortec)**

Unit price (1 qty)	$6.88 (LCSC; limited stock at major distributors)	$3.51 (DigiKey, active production)	OBSOLETE — no longer manufactured (DigiKey, 2024)
Axes	3-axis accelerometer + 3-axis gyroscope	3-axis accelerometer + 3-axis gyroscope	3-axis accelerometer + 3-axis gyroscope
Interface	I2C or SPI	I2C or SPI	I2C or SPI
Accelerometer range	Plus or minus 2g to plus or minus 16g	Plus or minus 2g to plus or minus 16g	Plus or minus 2g to plus or minus 16g
Lifecycle status	Active in production (TDK)	Active in production (ST)	OBSOLETE — DigiKey marked end-of-life 2024
Library support	Extensive — widely used, many open-source libraries	Good — ST HAL library, Arduino library available	Limited — development risk due to EOL status
Company specified	Yes — already used in company existing prototype	No	No — and now obsolete
Why selected is better	Specified by the industry partner and already integrated in the existing prototype, ensuring firmware and hardware compatibility with no redesign needed. Adequate performance for motion data logging and impact detection at the lowest cost among available options.	Lower price at DigiKey and still in active production — would be the better alternative if starting fresh. However, switching requires firmware changes and breaks compatibility with existing prototype.	OBSOLETE as of 2024 — not recommended for any new design. Using an end-of-life component would create supply chain risk for production. Not suitable as an alternative.

Table 4: IMU Comparison

3.2.5 Voltage Measurement Approach

The voltage measurement method was selected based on simplicity and cost. Three options were considered: resistor divider with ADC, INA219 sensor, and BQ76920 battery management IC (Table 5).

The INA219 provides both voltage and current measurement, while the BQ76920 offers advanced battery monitoring features. However, both options increase system complexity and cost.

The resistor divider approach is simple and low cost. It uses only two resistors and the built-in ADC of the STM32.

Testing results show that the measurement error is about 1.0 percent, which is acceptable for detecting voltage changes in this prototype.

Therefore, the resistor divider approach was selected because it meets the requirements while keeping the design simple and easy to implement.

Voltage	**ADC + Resistor Divider (R3=100 kΩ, R4=10 kΩ on PA0)**	**INA219AIDR (Texas Instruments)**	**BQ76920RGER (Texas Instruments)**
Unit price (1 qty)	Near zero — two standard resistors (~$0.01 total)	$1.89 (DigiKey, SOIC-8)	~$4.50 (DigiKey, VQFN-20)
Measurement capability	Voltage only — single measurement point via ADC	Voltage + current measurement via I2C (high-side)	Multi-cell voltage, pack current, and temperature via I2C
ADC resolution	12-bit (STM32 built-in, 4096 levels)	12-bit (internal ADC with PGA)	16-bit (dedicated precision ADC)
Accuracy	Average error 1.0% confirmed in testing against multimeter	0.5% typical (manufacturer specification)	0.1% typical (manufacturer specification)
Cell balancing	Not supported	Not supported	Passive cell balancing supported (up to 5 cells in series)
Max input voltage	3.3V at ADC pin; 24V supply with current divider ratio	Up to 26V (bus voltage)	Up to 25V per cell; designed for multi-cell stacks

External components needed	2 resistors only	Shunt resistor, I2C pull-ups	MOSFETs, protection resistors, many passive components
Design complexity	Very low — two resistors and one ADC pin	Low — I2C interface, well documented	High — requires full BMS circuit design
Why selected is better	Near-zero cost and minimal complexity for prototype validation purposes. The 1.0% average measurement error confirmed in testing is sufficient to detect significant voltage anomalies. No additional components or ICs needed. Appropriate for the current prototype stage where the goal is validating circuit and firmware logic, not production-grade measurement.	Adds current measurement but at extra cost and firmware complexity. Current monitoring is identified as future work. The added capability is not needed at the prototype stage and would add unnecessary complexity.	Designed for full multi-cell BMS applications with capabilities far beyond prototype needs. High design complexity, high cost, and many supporting components required. More appropriate as a future production BMS chip than for this prototype.

Table 5: Voltage Measurement Approach Comparison

3.3 Prototype Implementation

This project follows an iterative prototyping approach to progressively improve system functionality and address limitations identified during development.

The initial prototype was based on the existing hardware platform provided by the industry partner. This baseline system includes the MPU6050 IMU and the 4G and GPS communication module, and serves as a telematics platform for motion tracking and data transmission.

Building on this baseline, a second prototype was developed by integrating additional sensing capabilities. Specifically, a DS18B20 temperature sensor

and a voltage measurement circuit were added to enable battery condition monitoring. This extends the system from a telematics-only platform to an integrated safety monitoring system.

However, during implementation, several system-level limitations were identified. First, the available GPIO resources on the original microcontroller were insufficient to support all required sensors simultaneously, leading to interface constraints. Second, the original GPS module showed unstable performance during field testing, with frequent signal loss in urban environments.

To address these issues, the system underwent further refinement. The communication module was upgraded to the AIR780EX, which integrates both 4G and multi-constellation GNSS, significantly improving positioning reliability. In addition, the microcontroller was upgraded to better support multiple peripherals and reduce resource conflicts, enabling more stable system operation.

The current prototype reflects these refinements and represents a more integrated and robust system, where sensing, communication, and processing components are better aligned with system requirements.

This iterative development process demonstrates how the design was continuously improved through identification of limitations, hardware upgrades, and system-level optimization.

4. Implementation

4.1 Hardware Connections

The DS18B20 connects to PA7 via the 1-Wire protocol. In the current prototype, the divider samples the supply rail from the USB power source, and firmware reconstructs the supply voltage from the raw ADC reading. With USB power, the system reads approximately 3.0V on the voltage channel.

The MPU-6050 and the OLED display HS96L03W2C03 share the I2C2 bus on PB10 for SCL and PB11 for SDA. Because the two devices use different addresses, 0x68 for the MPU-6050 and 0x3C for the OLED, they can share the same bus without conflict. The AIR780EX connects to UART1 on PA9 for TX

and PA10 for RX, and is powered from the 5V supply rail.

4.2 Firmware

The firmware runs on a continuous polling loop. In each cycle, the STM32 first reads the DS18B20 temperature sensor, the ADC voltage, and the MPU-6050 accelerometer and gyroscope data. It then updates the OLED display with the current temperature, voltage, and system status. Finally, it sends all sensor data to the OneNET platform via the AIR780EX at a rate of once per second. Each upload includes the temperature reading, the voltage reading, the accelerometer values for all three axes, the gyroscope values for all three axes, and the GPS coordinates.

On the OneNET platform, threshold rules are configured for each data stream. When the gyroscope reading exceeds the configured threshold of 500 degrees per second, the platform flags the event and the mobile app displays a Large-angle rollover message. The GPS coordinates that are uploaded at the same moment allow the vehicle location to be identified at the time of the event. Placing all threshold logic on the cloud platform rather than in the device firmware means that thresholds can be adjusted without reflashing the device. This is practical for a startup partner who may need to tune alert parameters frequently during development. When any threshold is exceeded, the platform triggers an email alert to the registered user. SMS alerts are available on the enterprise tier as a future upgrade.

4.3 Challenges and Solutions

Three implementation challenges were encountered and resolved during the build.

The first challenge was the I2C address conflict between the MPU-6050 and the OLED display, since both were intended to share the same I2C2 bus. The addresses of the two devices were checked before connecting them. The MPU-6050 uses 0x68 and the OLED uses 0x3C, so they could share the bus without conflict.

The second challenge was protecting the STM32 ADC input from overvoltage. The STM32 ADC is limited to 3.3V, and connecting a higher voltage directly to

the ADC pin would damage the microcontroller. The 100 kΩ and 10 kΩ resistor divider ensures the ADC pin stays within safe limits for any input voltage within the expected range, with the firmware scaling factor set to match the divider ratio.

The third challenge was that the target vehicle's 400V battery pack cannot be safely connected to a breadboard circuit. The voltage monitoring circuit was therefore validated by sampling the USB supply rail through the resistor divider. This produces a stable reading of approximately 3.0V, which confirms that the ADC measurement circuit and the firmware threshold logic both function correctly.

5. Testing and Results

5.1 Test Overview

A set of functional tests was conducted to evaluate the performance of the developed system. The testing focused on six key subsystems, including temperature monitoring, voltage sensing, motion and impact detection, OLED display output, cloud data logging, and alert processing speed.

5.2 Temperature Monitoring Test

The DS18B20 was warmed by hand for the 25 °C threshold, and by hair dryer for the 40 and 50 °C thresholds. The OLED display updated the temperature reading in real time throughout each test. The mobile app showed an alert in all three cases.

Threshold / °C	Heat source	Maximum temperature reached (°C)	Alert triggered
25	Hand	28.5	Yes
40	Hair dryer	47	Yes
50	Hair dryer	61	Yes

Table 6: Temperature Monitoring Test

5.3 Voltage Monitoring Test

With the system powered by USB, the resistor divider samples the supply rail and the firmware reconstructs a reading of approximately 3.0V. The threshold was set to 3.0V, so an alert was triggered when the reading reached the threshold. ADC readings were compared against a multimeter at the same measurement point at three time points.

Reading	Multimeter / V	ADC reading / V	Error (%)
1	3	2.9	3.33
2	3	3.0	3.33
3	3	2.9	3.33
Average		2.9	3.33

Table 7: Voltage Monitoring Test

5.4 Motion Data and Impact Detection Test

The MPU-6050 was rotated sharply by hand to produce a gyroscope reading that exceeded the threshold of 500. The mobile app displayed a Large-angle rollover message and an alert was triggered on the platform (Figure 1).

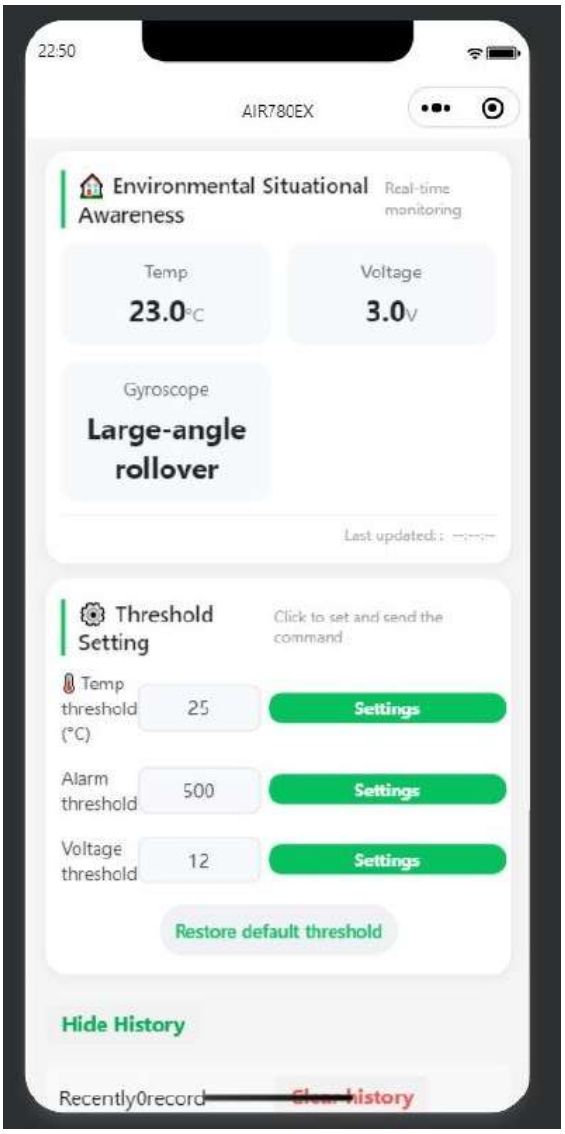

Figure 1: App showing Large-angle rollover message

5.5 OLED Display and Cloud Data Logging Test

The OLED display showed correct temperature and voltage readings during normal operation, matching the values in the app. All four data streams, which are temperature, voltage, accelerometer, and gyroscope, updated at once per second with no dropouts over a five-minute test period (Figure 2) (Figure 3).

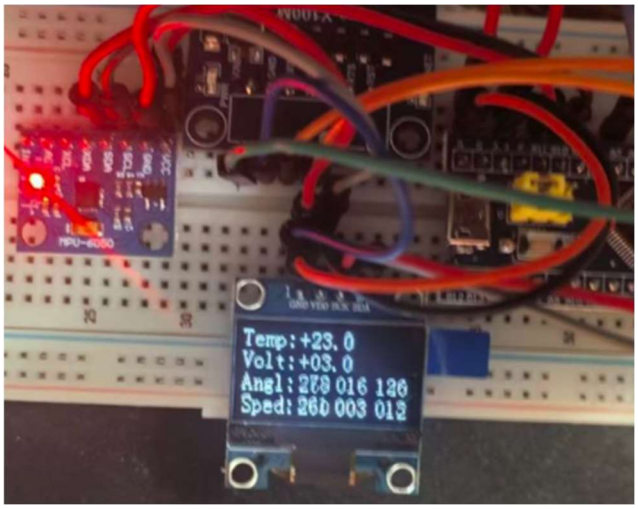

Figure 2: OLED display during normal operation

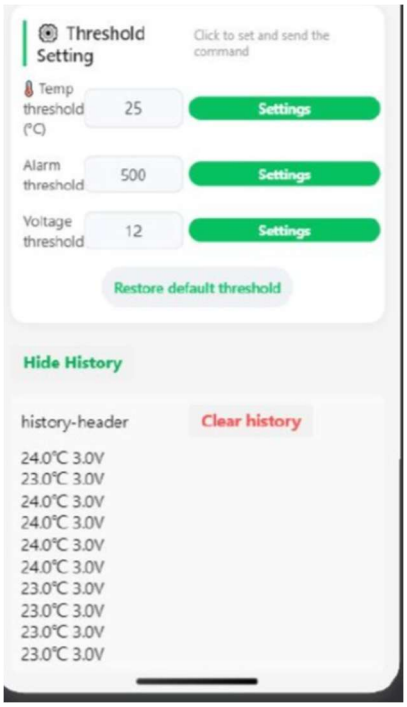

Figure 3: Cloud Data Logging

5.6 Alert Processing Speed Test

The OneNET platform displayed the alert approximately 2 seconds after the temperature reading exceeded the 25 °C threshold.

6. Discussion

6.1 Achievement of Objectives

This project set out five objectives. Four of them were fully met, and one was partially met.

The first objective, temperature monitoring, was met. The system successfully detected temperature changes and triggered alerts at all three configured thresholds of 25, 40, and 50 °C during testing.

The second objective, voltage monitoring, was partially met. The ADC measurement circuit showed an average error of 1.0% compared to a multimeter, which confirms that the circuit and firmware logic are working correctly. However, the system was only tested with the stable USB supply rail reading rather than a real battery that changes voltage during charging and discharging, so dynamic battery behaviour has not been validated.

The third objective, motion data logging with GPS, was met. The gyroscope threshold successfully triggered a Large-angle rollover alert when the MPU-6050 was rotated sharply, and the GPS coordinates at the time of the event were recorded correctly on the platform.

The fourth objective, local OLED display, was met. The temperature and voltage readings shown on the display matched the values in the mobile app, and the display updated within one second of any change in sensor readings.

The fifth objective, remote monitoring and alerting via 4G, was met. All five data streams were uploaded to the OneNET platform at once per second with no dropouts, and the alert processing speed was approximately two seconds from the moment a threshold was exceeded to the moment the alert appeared in the app.

6.2 System Performance

The DS18B20 gave stable readings across all three temperature threshold tests with no manual calibration needed. Its factory calibration removes a common source of error in analog sensor circuits, which is particularly valuable in a prototype environment where time and resources for individual sensor calibration are limited. The ADC average error of 3.33% is adequate for detecting significant voltage anomalies. For a lithium-ion cell with a nominal voltage of around 3.7V, a 3.33% error corresponds to approximately 0.12V, which is small compared to the voltage changes that are associated with genuine fault conditions. The gyroscope threshold of 500 reliably detected a sharp rotation and triggered the Large-angle rollover alert during testing. The 2-second alert processing time is acceptable because the system's purpose is post-event notification and data logging rather than real-time physical intervention.

The GPS field test finding is notable beyond this project. The single-constellation GT-U7 repeatedly failed to maintain a fix in Singapore's CBD, while the multi-constellation AIR780EX maintained reliable positioning in the same conditions. Dense high-rise urban environments are common in Singapore and other Asian cities where electric motorcycles are widely used. This finding suggests that multi-constellation GNSS should be the baseline requirement for any IoT system that needs reliable urban positioning in this region, not just for this project.

6.3 Limitations

Five limitations were identified in the current prototype. First, voltage monitoring was only validated with a stable USB supply rail reading, so the system's behaviour under a real battery that changes voltage over time has not been confirmed. Second, the system can only monitor and alert but cannot physically disconnect the battery when a fault is detected, which means it depends entirely on the rider or a remote person taking action after receiving an alert. Third, the breadboard prototype is not suitable for motorcycle deployment because breadboard connections can come loose under vibration and have higher contact resistance than a PCB. Fourth, the single DS18B20 sensor may miss hotspots in other parts of a multi-cell battery pack, since temperature distribution across cells is not uniform. Fifth, the system does not measure

current, and overcurrent conditions are a common precursor to thermal runaway, so their absence limits the system's fault detection coverage.

7. Conclusion and Future Work

7.1 Conclusion

This project successfully designed and implemented a prototype IoT-based battery safety monitoring system for an electric motorcycle. Four out of five objectives were fully met through functional testing. Temperature alerts were confirmed at three different thresholds using hand warming and a hair dryer. ADC voltage measurement showed an average error of 3.33% against a multimeter. A sharp rotation of the MPU-6050 triggered a Large-angle rollover alert with GPS coordinates recorded. The alert processing speed was approximately 2 seconds from threshold exceedance to alert appearing in the app.

The contribution of this project is system integration. No existing commercial product or research prototype currently provides the same combination of battery temperature monitoring, voltage monitoring, motion data logging, GPS reporting, and 4G connectivity in one device designed for electric motorcycles. The GPS field test in Singapore's CBD also produced a reproducible finding that is relevant to any IoT system requiring reliable urban positioning. Single-constellation GPS is insufficient in dense high-rise urban environments, and multi-constellation GNSS is necessary.

7.2 Impact and Potential

The developed system shows strong potential for real-world deployment, particularly for small-scale electric motorcycle fleets, startup manufacturers, and track vehicles that lack integrated battery safety monitoring. This is supported by the system’s ability to operate independently via 4G connectivity and provide real-time monitoring and alerting, as demonstrated in Section 5 where continuous data upload and alert triggering were achieved without data loss.

The system can function as an external add-on module without requiring modifications to the existing battery system. This is enabled by the use of external sensors and independent power supply in the current prototype, which avoids direct integration with high-voltage battery circuitry.

The transition from prototype to deployment is feasible through incremental engineering improvements. These include redesigning the voltage sensing circuit for high-voltage isolation, implementing a PCB-based hardware platform to replace the breadboard used in this project, and upgrading to enterprise-level cloud services for enhanced alerting. These steps address the limitations identified in Section 6.3 and do not require changes to the overall system architecture.

The system is also economically viable at the prototype level. Based on the component selection in Section 3.2, the total bill of materials is estimated to be below USD 35, which suggests that the system could be implemented as a low-cost add-on safety module, particularly for cost-sensitive applications.

Beyond this project, the system demonstrates a scalable architecture for integrating sensing, communication, and cloud-based monitoring in mobile environments. This is supported by the successful integration of temperature sensing, voltage monitoring, motion detection, GPS tracking, and 4G communication within a single system, as validated in the testing results.

7.3 Future Work

The most immediate next step is to test voltage monitoring against a real lithium-ion battery under charge and discharge conditions, to confirm that the circuit and firmware logic work correctly when the input voltage changes over time. The voltage measurement circuit will also need to be redesigned for the 400V target battery with appropriate high-voltage isolation before the system can be deployed on the actual vehicle. The breadboard prototype should be converted to a PCB with vibration resistance and waterproofing to make it suitable for motorcycle mounting. A hardware cutoff circuit using a relay or MOSFET should be added so the system can physically disconnect the battery in response to a detected fault, rather than relying on notification alone. Multiple DS18B20 sensors should be added to monitor temperature at different points on the battery pack, which is straightforward because the 1-Wire protocol supports daisy-chaining multiple sensors on the same pin. A current sensor

should be added to enable overcurrent detection and state-of-charge estimation. The gyroscope threshold should be calibrated using real riding data from the target motorcycle to ensure the Large-angle rollover alert can distinguish genuine crash events from normal cornering and road vibration. Finally, the completed system should be integrated and validated on the target vehicle under controlled conditions before road or track use.

References

1. Abd Wahab, M. H. (2018). IoT-based battery monitoring system for electric vehicle. International Journal of Engineering and Technology, 7(4.31), 505-510. https://www.researchgate.net/publication/343786968_IoT-Based_Battery_Monitoring_System_for_Electric_Vehicle
2. CHIGEE. (n.d.). AIO-6 motorcycle smart system. https://www.chigee.com
3. GeoRide. (n.d.). Smart motorcycle tracker with crash detection. https://georide.eu
4. Hsieh, M. K. H., Lai, M. C., Sim, H. S. N., Lim, X., Fok, S. F. D., Joethy, J., Kong, T. Y., & Lim, G. J. S. (2021). Electric scooter battery detonation: A case series and review of literature. Annals of Burns and Fire Disasters, 34(3), 264-276. https://pmc.ncbi.nlm.nih.gov/articles/PMC8534310/
5. Krishna, G., Singh, R., Gehlot, A., Shaik, V. A., Twala, B., & Priyadarshi, N. (2024). IoT-based real-time analysis of battery management system with long range communication and FLoRa. Results in Engineering, 23(4), 102770. https://doi.org/10.1016/j.rineng.2024.102770
6. Lu, H. L. (2021). The design of parameter test system for lithium battery of electric vehicle based on STM32 single-chip microcomputer. Open Access Library Journal, 8, e8265. https://doi.org/10.4236/oalib.1108265
7. Maxim Integrated. (2019). DS18B20 programmable resolution 1-wire digital thermometer datasheet. https://www.analog.com/media/en/technical-documentation/data-sheets/DS18B20.pdf
8. MOKOEnergy. (2024). Types of battery management system. https://mokoenergy.com/types-of-battery-management-system/
9. Revolt Motors. (n.d.). What is a battery management system. https://www.revoltmotors.com/blog/what-is-battery-management-system
10. STMicroelectronics. (2015). STM32F103x8 STM32F103xB medium-density performance line ARM-based 32-bit MCU datasheet. https://www.st.com/resource/en/datasheet/stm32f103c8.pdf
11. Teltonika. (2024). Advanced EV battery monitoring with OBD data reading devices. https://www.teltonika-gps.com/use-cases/emobility-management/advanced-ev-battery-monitoring-with-obd-data-reading-devices
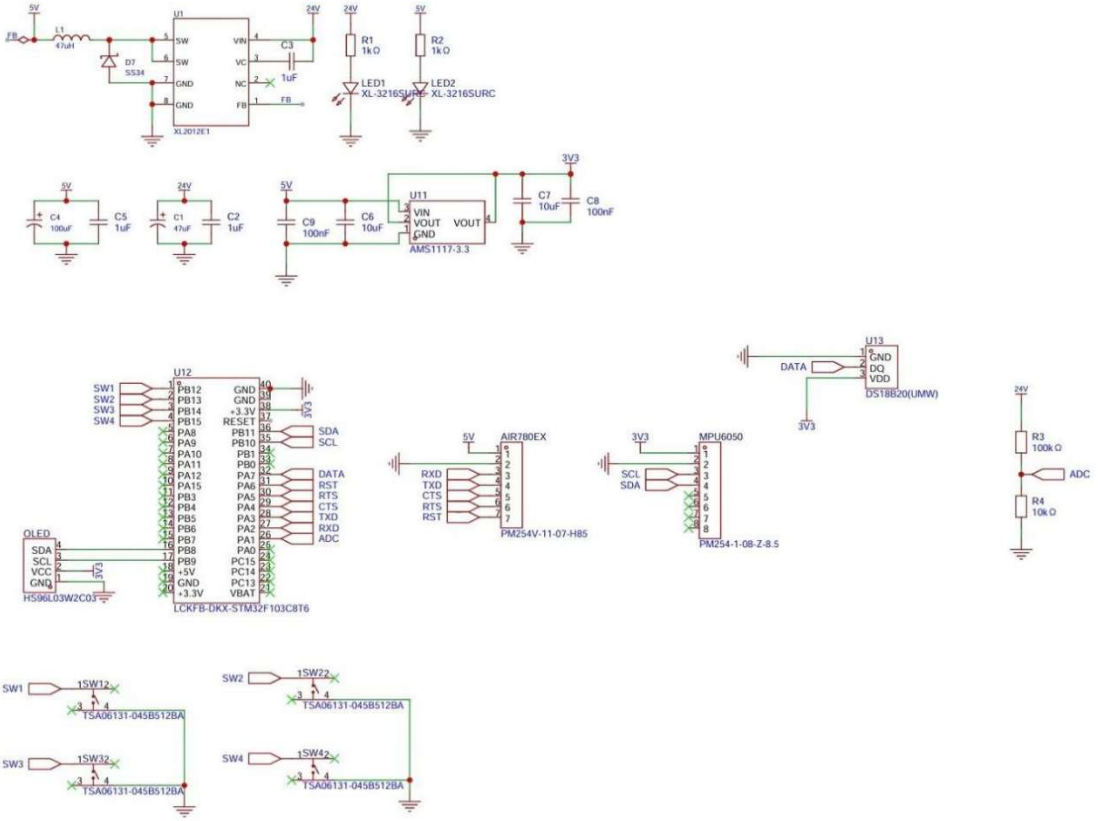
Appendix A: System Schematic